SAMSUNG CONFIDENTIAL
THIS DOCUMENT CONTAINS CONFIDENTIAL
AND PROPRIETARY INFORMATION OF
SAMSUNG ELECTRONICS CO'S PROPERTY.
DO NOT DISCLOSE TO OR DUPLICATE FOR OTHERS
EXCEPT AS AUTHORIZED BY SAMSUNG.

RF PART 1

FRC CON

MAIN ANT1
L/MB

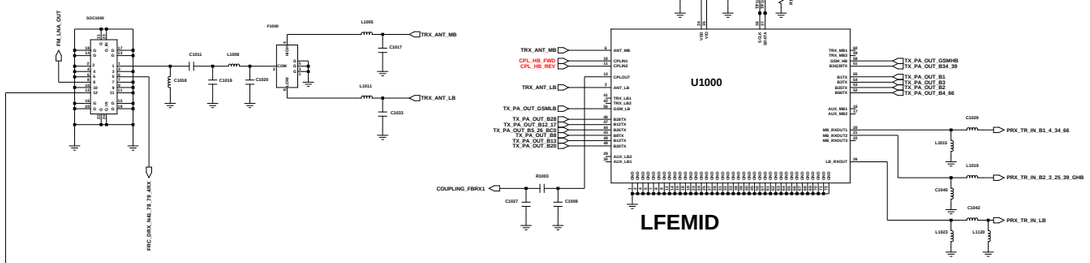

MAIN ANT2
HB, N41 TRX, N78/79 PRX MIMO

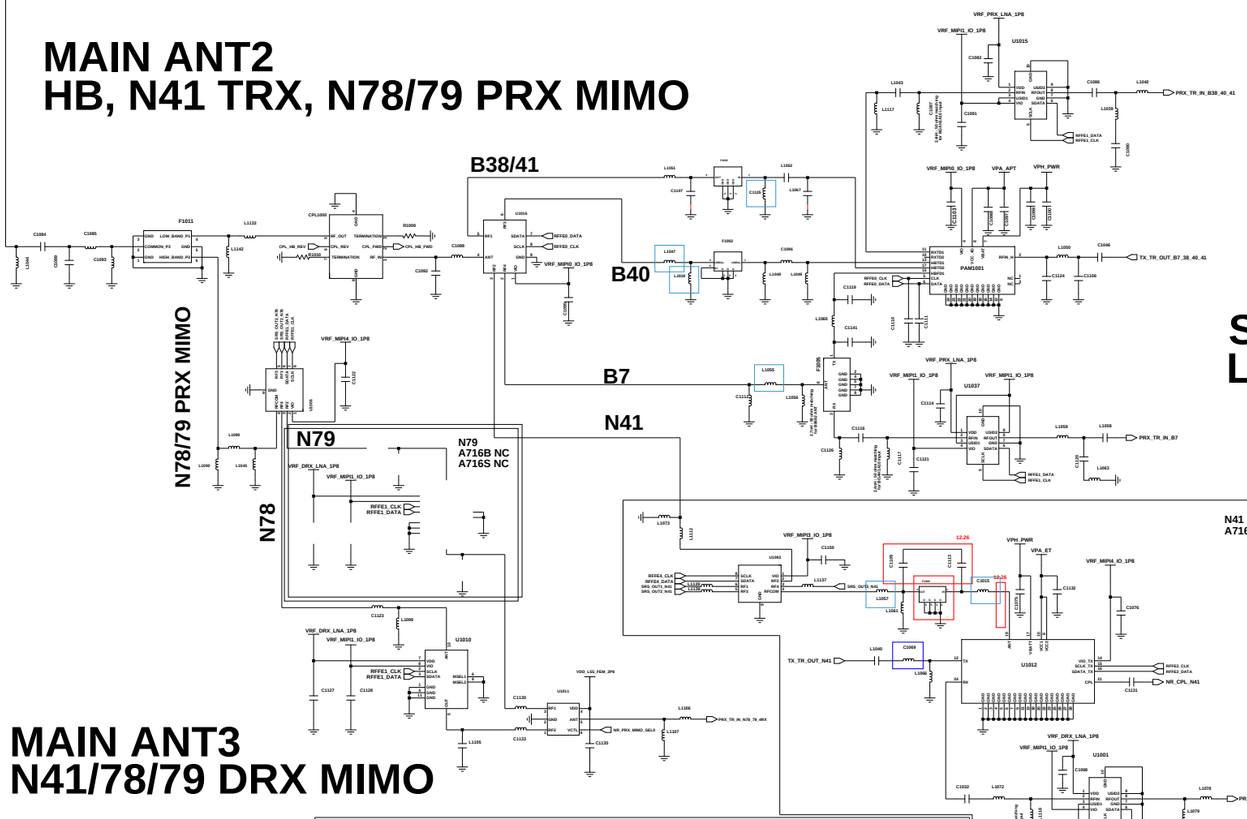

MAIN ANT3
N41/78/79 DRX MIMO

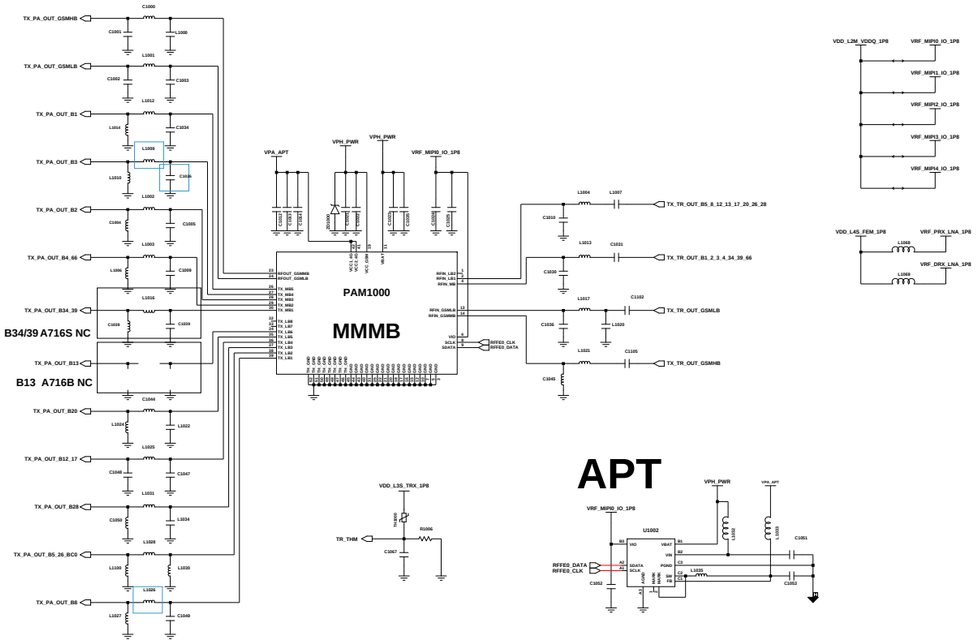

APT

SUB ANT1
LB DRX LFEM, N41 PRX MIMO, GPS L5

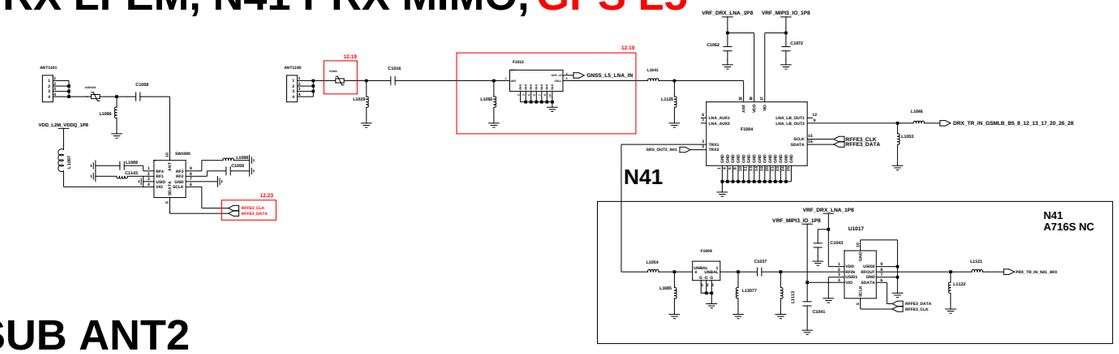

SUB ANT2
MHB LFEM, N41 DRX, N79 TRX, GPS L1

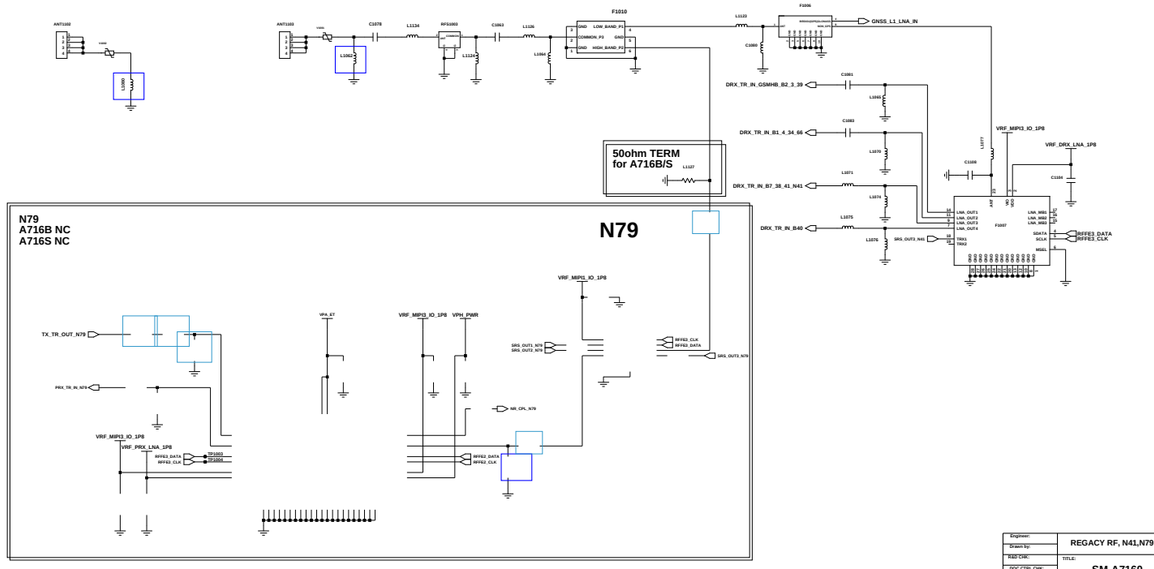

Engineer:	REGACY RF, N41,N79 TRX
Drawn by:	
R&D CHK:	TITLE: SM-A7160
DOC CTRL CHK:	
MFG ENGR CHK:	
QA CHK:	REV: Drawing Number: Page:

Changed by: | Date Changed: | Time Changed:

SAMSUNG CONFIDENTIAL
THIS DOCUMENT CONTAINS CONFIDENTIAL PROPRIETARY INFORMATION THAT IS SAMSUNG ELECTRONICS CO'S PROPERTY. DO NOT DISCLOSE TO OR DUPLICATE FOR OTHERS EXCEPT AS AUTHORIZED BY SAMSUNG.

RF PART 2

SUB ANT3
N78 TRX

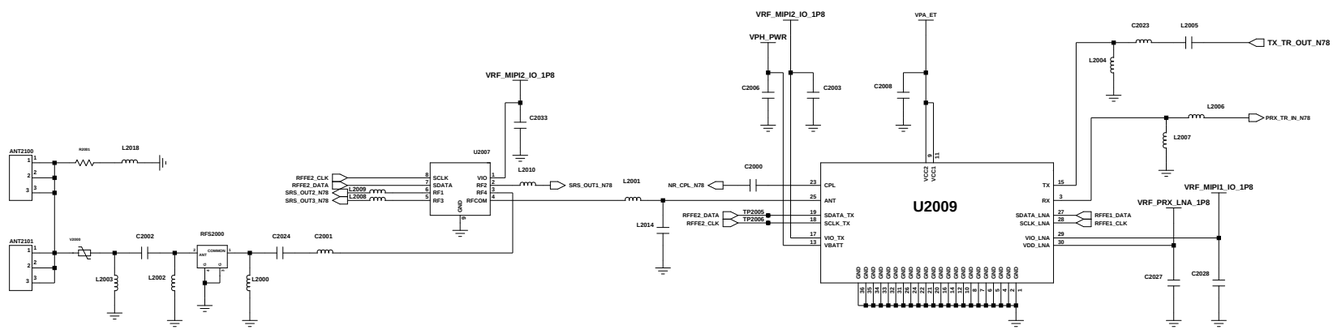

TRANSCEIVER

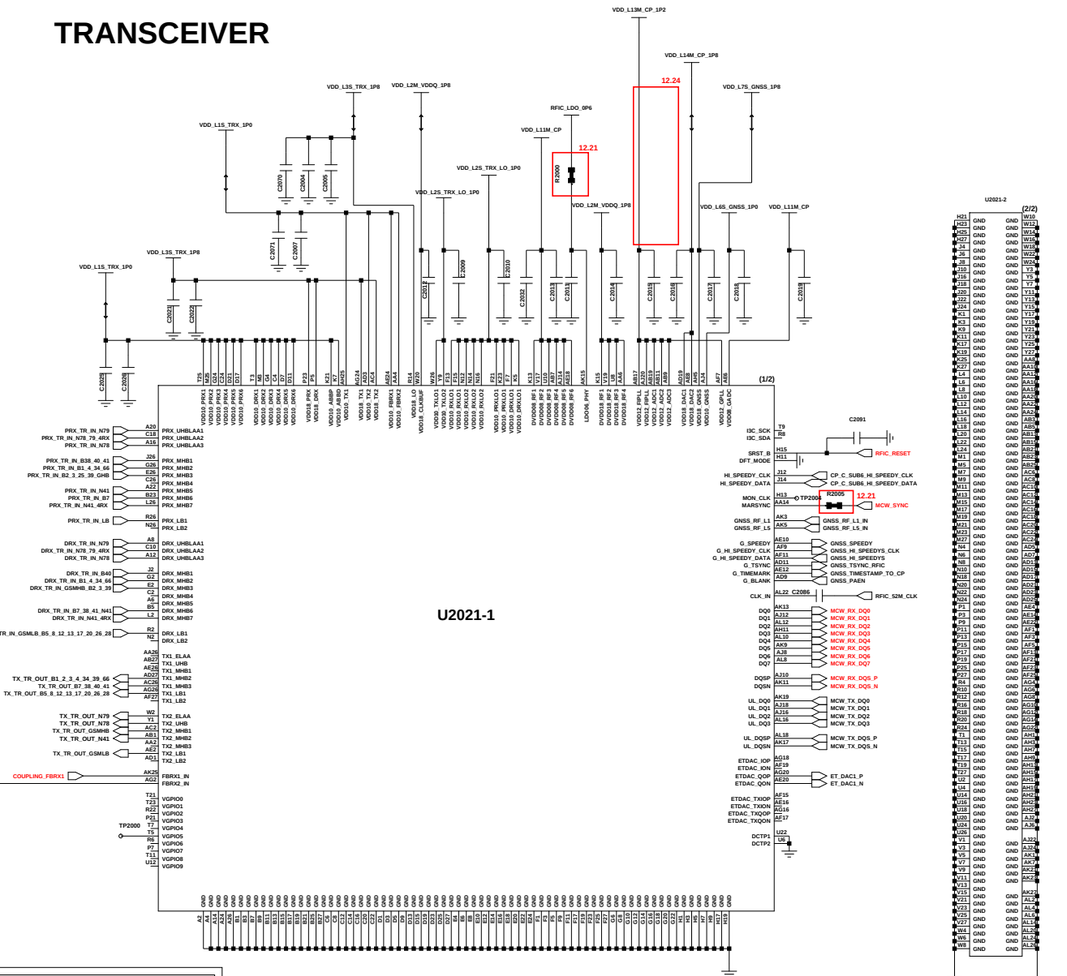

NR THM

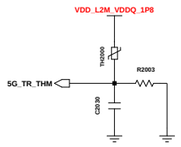

MXD8648RG

ON	VC1	VC2
RF1	L	L
RF2	L	H
RF3	H	L
RF4	H	H

NR FBRX

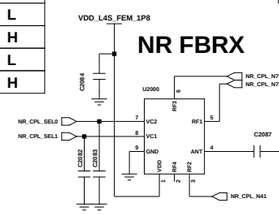

SUB ANT4 N78 DRX

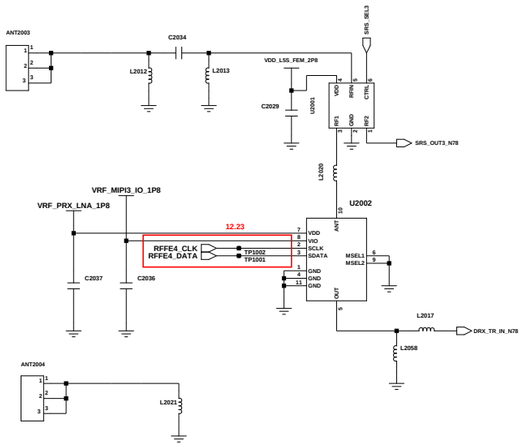

SUB ANT5
N79 DRX

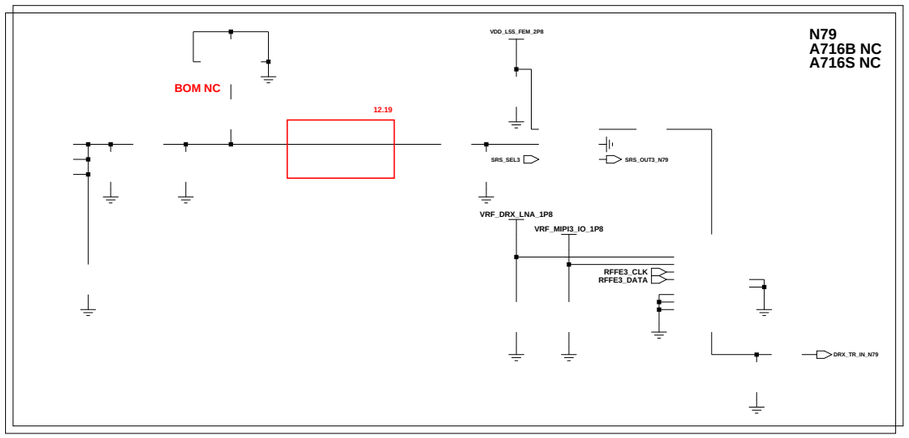

ET

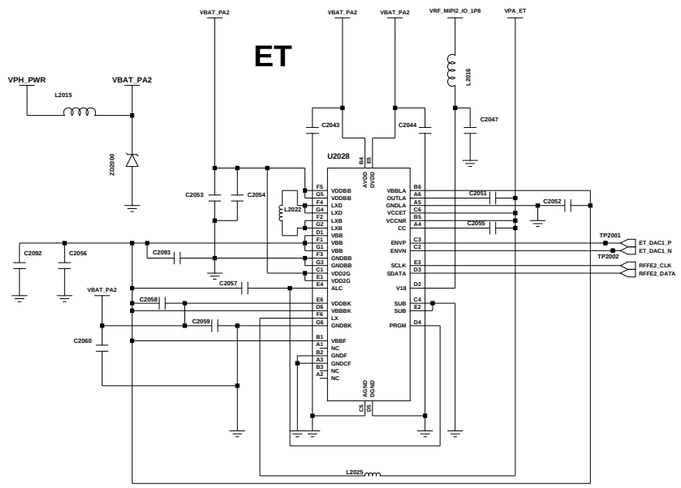

GND CCP

Metal

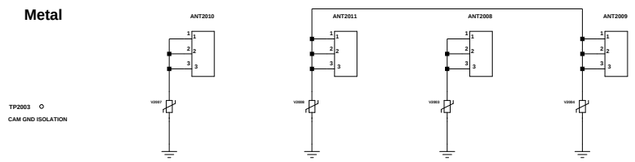

Engineer: user	TRANSCEIVER, N78 TRX		
Drawn by: user			
R&D CHK:	TITLE:	Size:	
DOC CTRL CHK:	SM-A7160		
MFG ENGR CHK:			
Changed by:	Date Changed:	Time Changed:	QA CHK:
REV	Drawing Number:	Page: 2/8	

SAMSUNG CONFIDENTIAL
THIS DOCUMENT CONTAINS CONFIDENTIAL
PROPRIETARY INFORMATION THAT IS
SAMSUNG ELECTRONICS CO'S PROPERTY.
DO NOT DISCLOSE TO OR DUPLICATE FOR OTHERS
EXCEPT AS AUTHORIZED BY SAMSUNG.

SENSOR

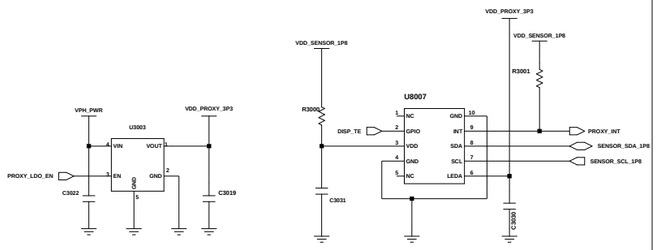

Proxy + RGB Sensor

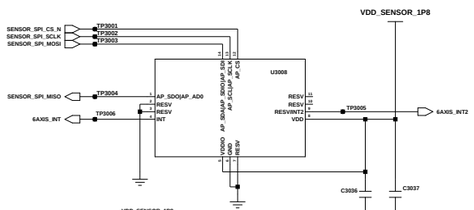

ACC&GYRO SENSOR

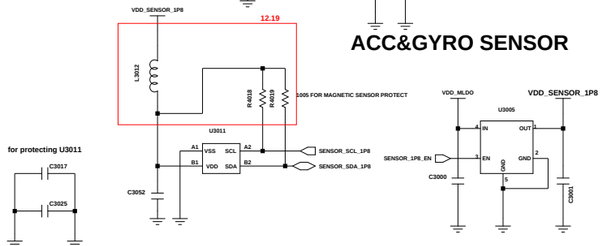

MAGNETIC SENSOR

WIFI/BT/FM

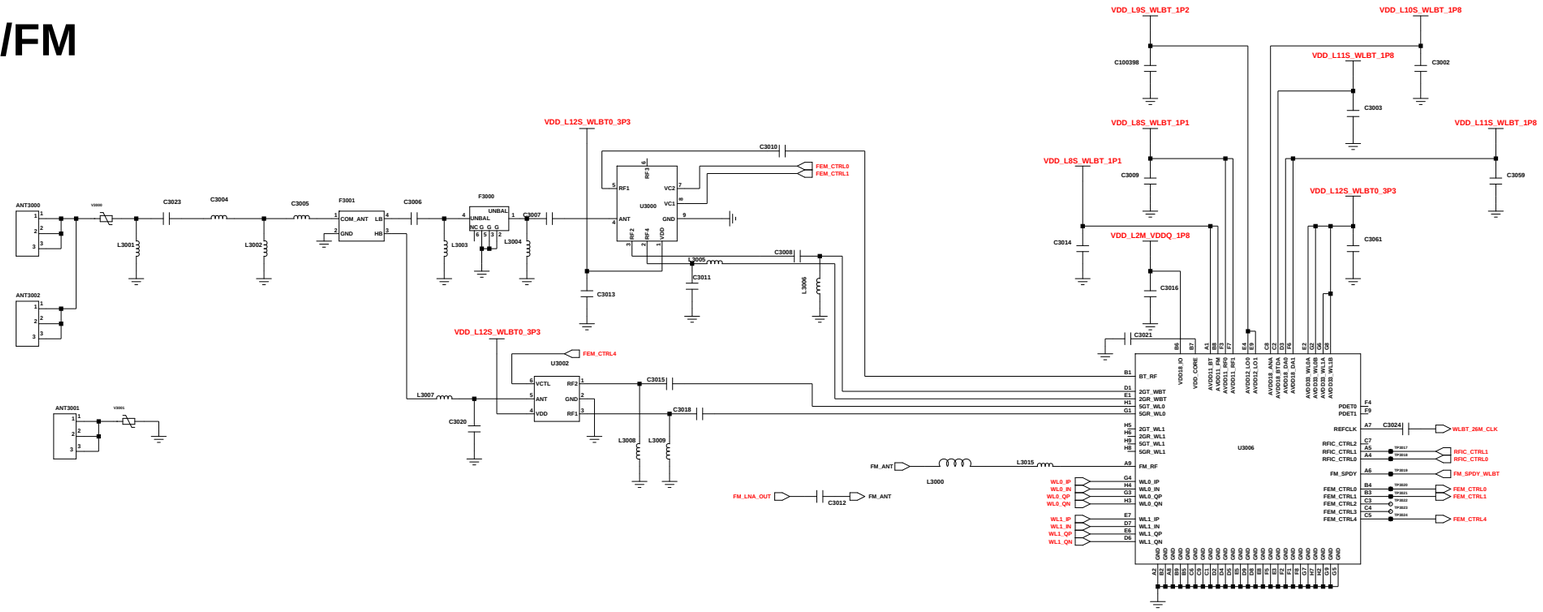

GPS L5

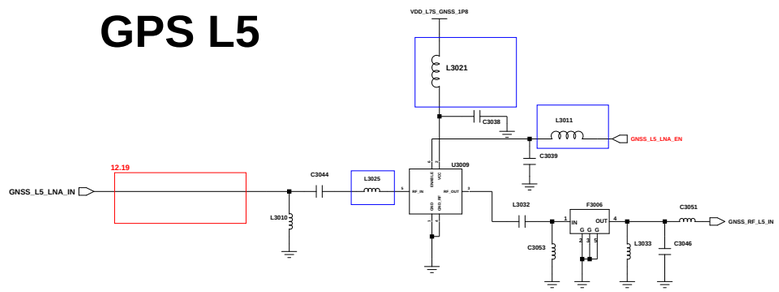

GPS L1 / GNSS/BEIDOU

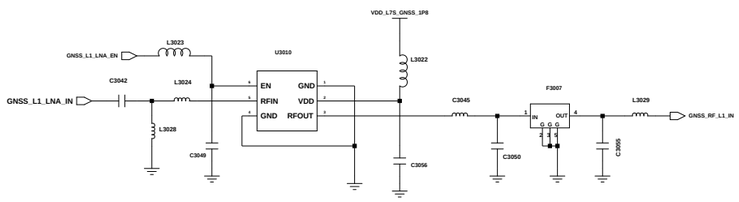

MST(KOR only)

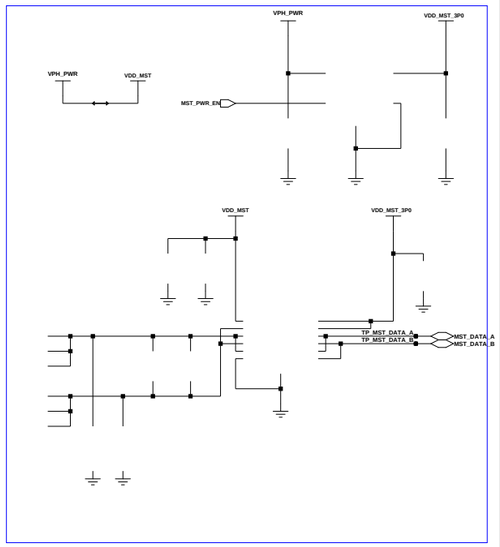

HALL_IC

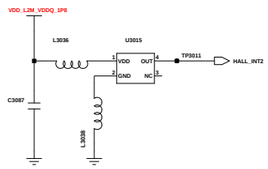

NFC

CHN eSE : PN80T
KOR UICC : PN553

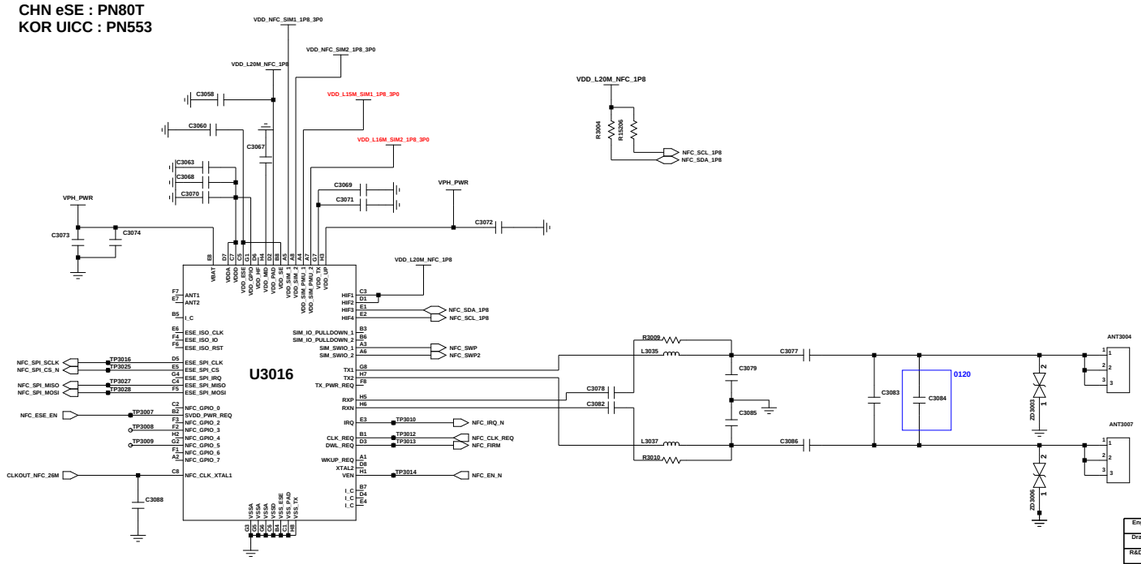

Engineer:			
Drawn by:			SENSOR, WIFI/BT/GPS/NFC
R&D CHK:			TITLE: / Size:
DOC CTRL CHK:			SM-A7160
MFG ENGR CHK:			
Changed by: / Date Changed:	Time Changed: / QA CHK:	REV / Drawing Number:	Page: 3/8

SAMSUNG CONFIDENTIAL
THIS DOCUMENT CONTAINS CONFIDENTIAL
PROPRIETARY INFORMATION THAT IS
SAMSUNG ELECTRONICS CO'S PROPERTY.
DO NOT DISCLOSE TO OR DUPLICATE FOR OTHERS
EXCEPT AS AUTHORIZED BY SAMSUNG.

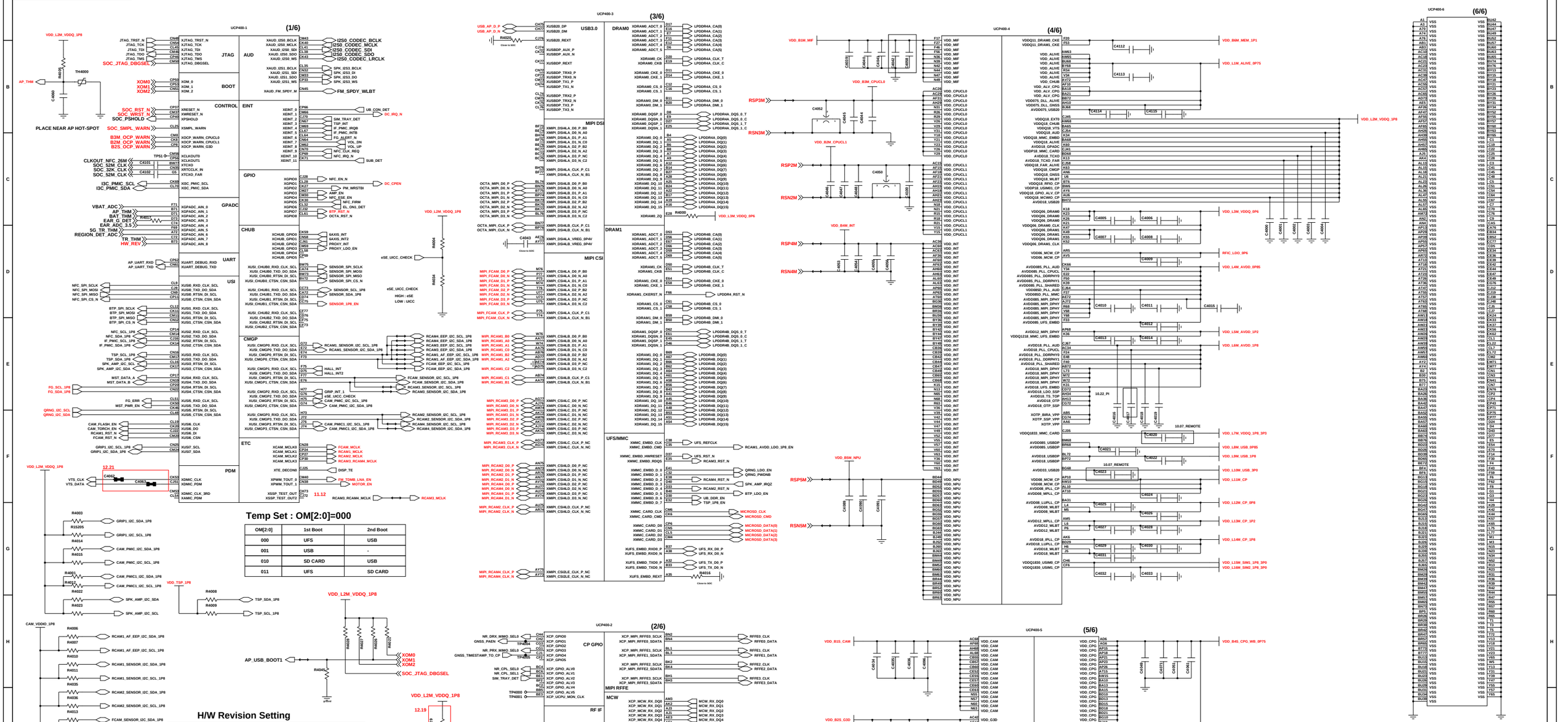

Temp Set : OM[2:0]=000

OM[2:0]	1st Boot	2nd Boot
000	UFS	USB
001	USB	-
010	SD CARD	USB
011	UFS	SD CARD

magnetic sensor I2C PU register move to sheet3

H/W Revision Setting

REV	HW ID	R1	R2	SUM OF R	Divided vol(V)	Target vol(V)
BRING-UP	0	OPEN	0	0	0.000	0.00
CURRENT	1	430	30	460	0.117	0.12
REV00(UB)	2	390	62	452	0.247	0.24
REV00A(DV1)	3	360	91	451	0.363	0.36
REV00A(1104)	4	330	120	450	0.48	0.48
REV01(DV2)	5	300	150	450	0.6	0.6
REV02(PV1)	6	270	180	450	0.72	0.72
REV03(PV2)	7	240	220	460	0.861	0.84

PCB JTAG

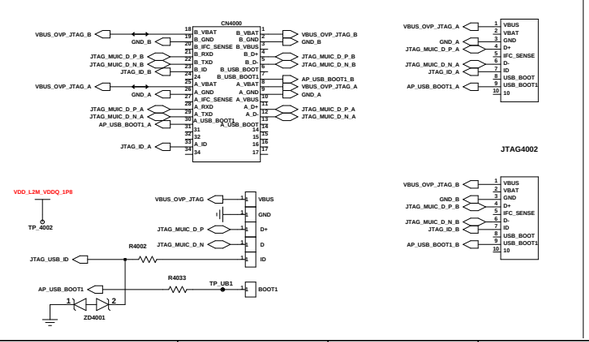

JTAG CONNECTOR
(BOM NC)

Engineer: user60	AP
Drawn by: user60	
R&D CHK:	TITLE:
DOC CTRL CHK:	SM-A7160
MFG ENGR CHK:	

Changed by:	Date Changed:	Time Changed:	QA CHK:	REV	Drawing Number:	Page:
						48

SAMSUNG CONFIDENTIAL
THIS DOCUMENT CONTAINS CONFIDENTIAL PROPRIETARY INFORMATION THAT IS SAMSUNG ELECTRONICS CO'S PROPERTY. DO NOT DISCLOSE TO OR DUPLICATE FOR OTHERS EXCEPT AS AUTHORIZED BY SAMSUNG.

MAIN PMIC

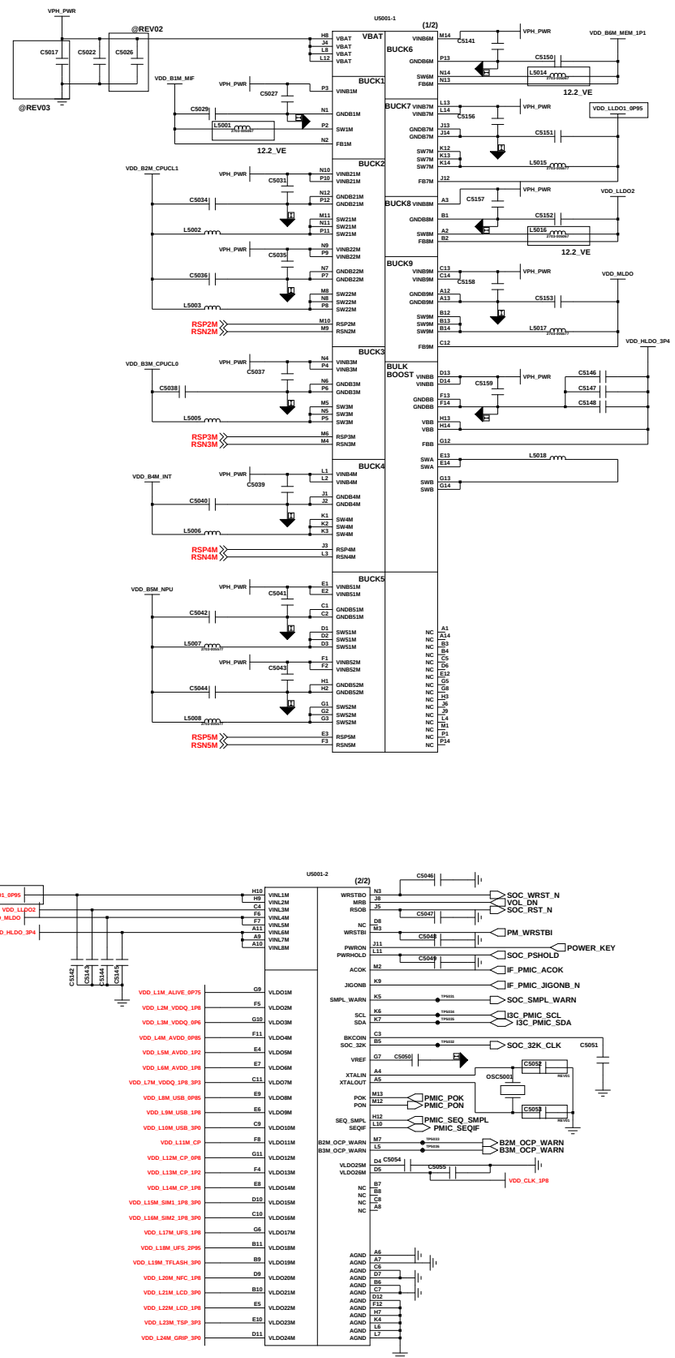

SLAVE PMIC

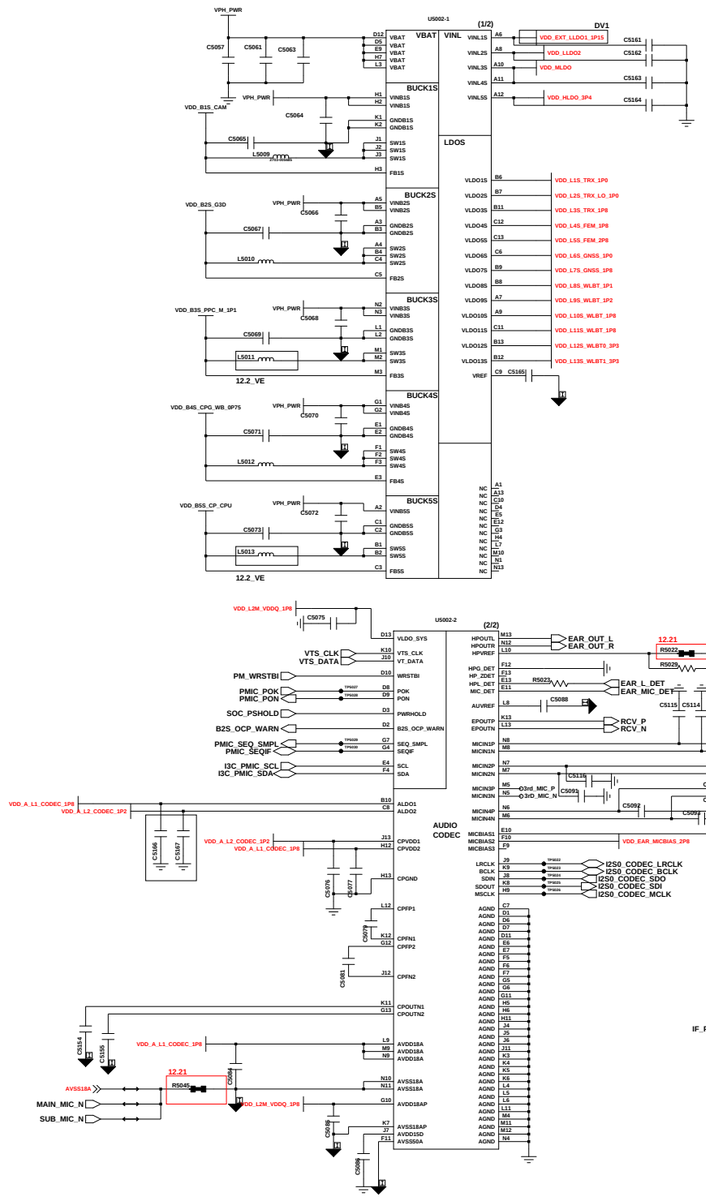

DIRECT CHARGER

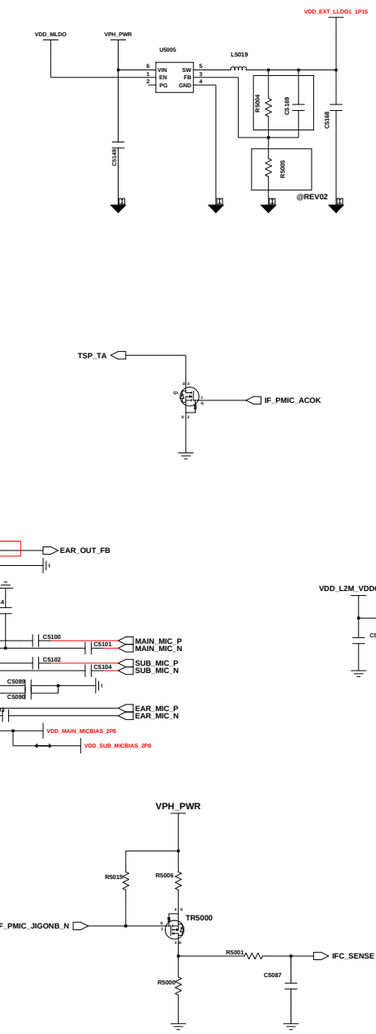

IF PMIC

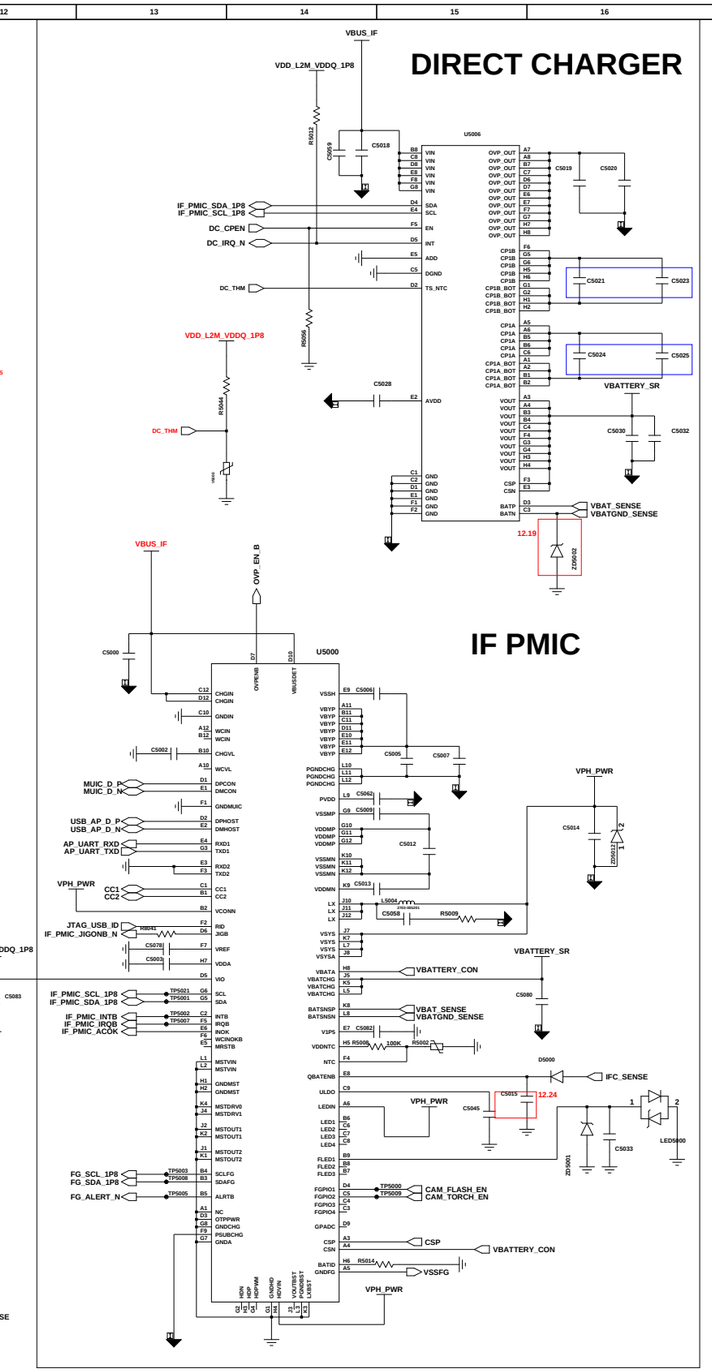

TCXO

BATTERY CON

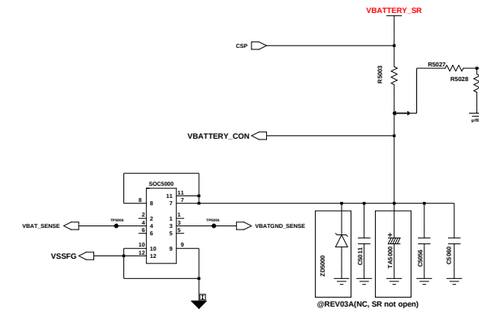

Engineer:	PMIC, CHARGER
Drawn by:	
RLD CHK:	TITLE:
DOC CTRL CHK:	SM-A7160
MFG ENGR CHK:	
Changed by: / Date Changed: / Time Changed: / QA CHK:	REV / Drawing Number: / Page: 5/8

SAMSUNG CONFIDENTIAL
THIS DOCUMENT CONTAINS CONFIDENTIAL
PROPRIETARY INFORMATION THAT IS
SAMSUNG ELECTRONICS CO'S PROPERTY.
DO NOT DISCLOSE TO OR DUPLICATE FOR OTHERS
EXCEPT AS AUTHORIZED BY SAMSUNG.

SIM / T-FLASH (3in2)

CHN : DS
KOR : SS

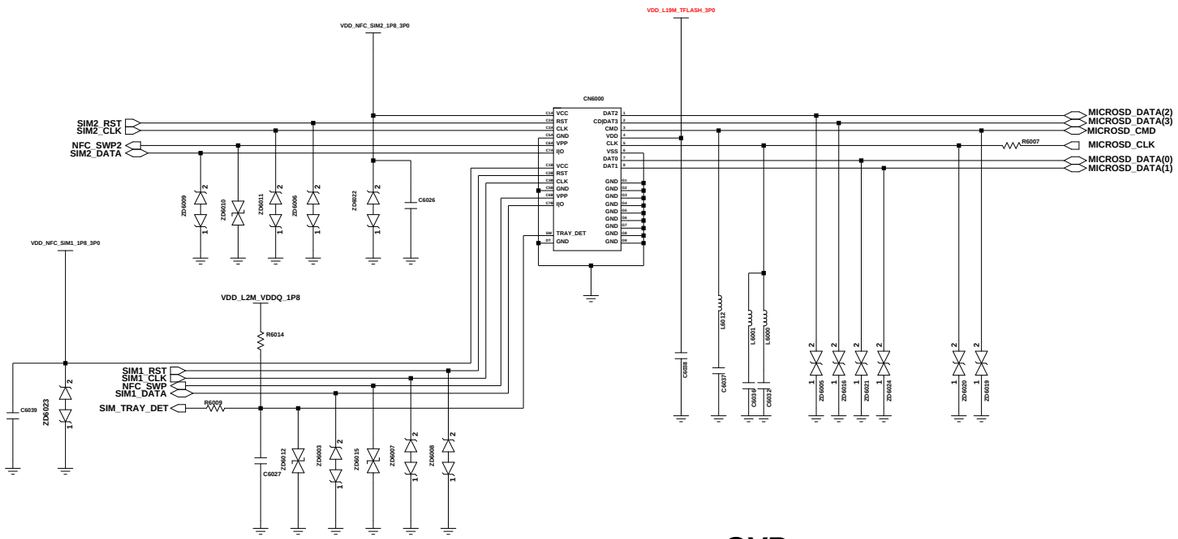

OVP

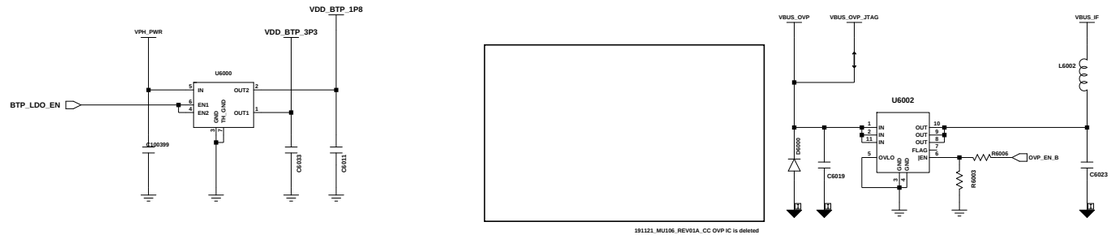

6G / 128G : (SEC) 1108-000660, (MICRON) TBD
8G / 128G : (SEC) 1108-000662, (MICRON) TBD

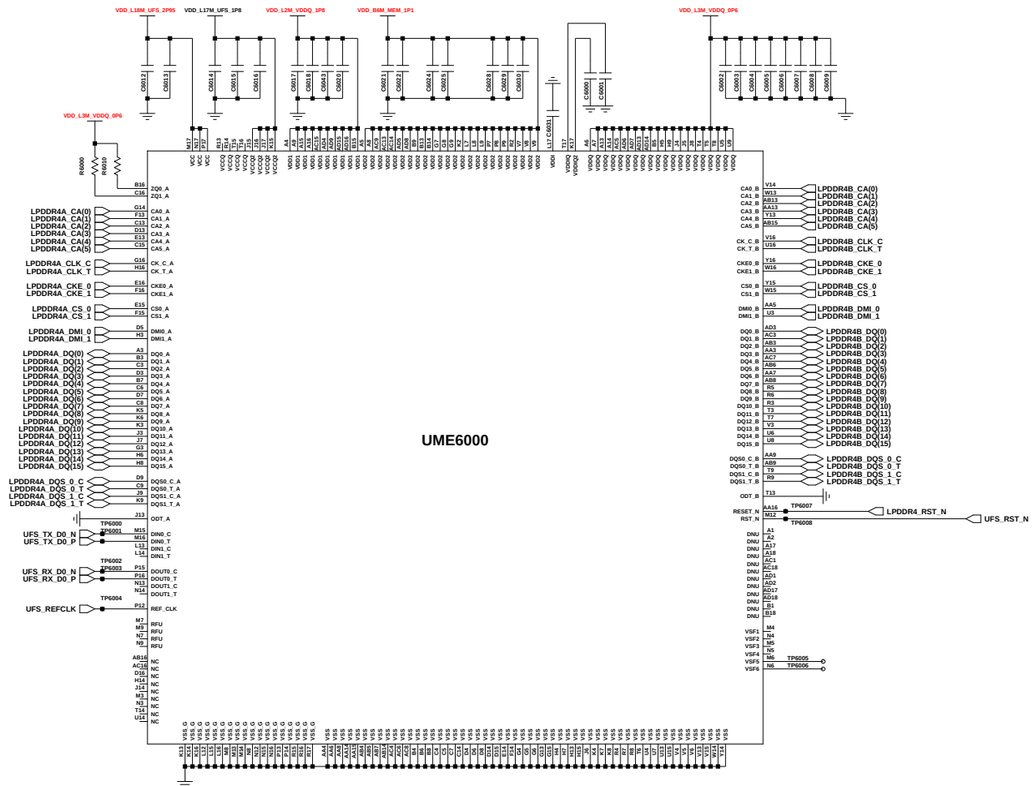

MAIN FPCB

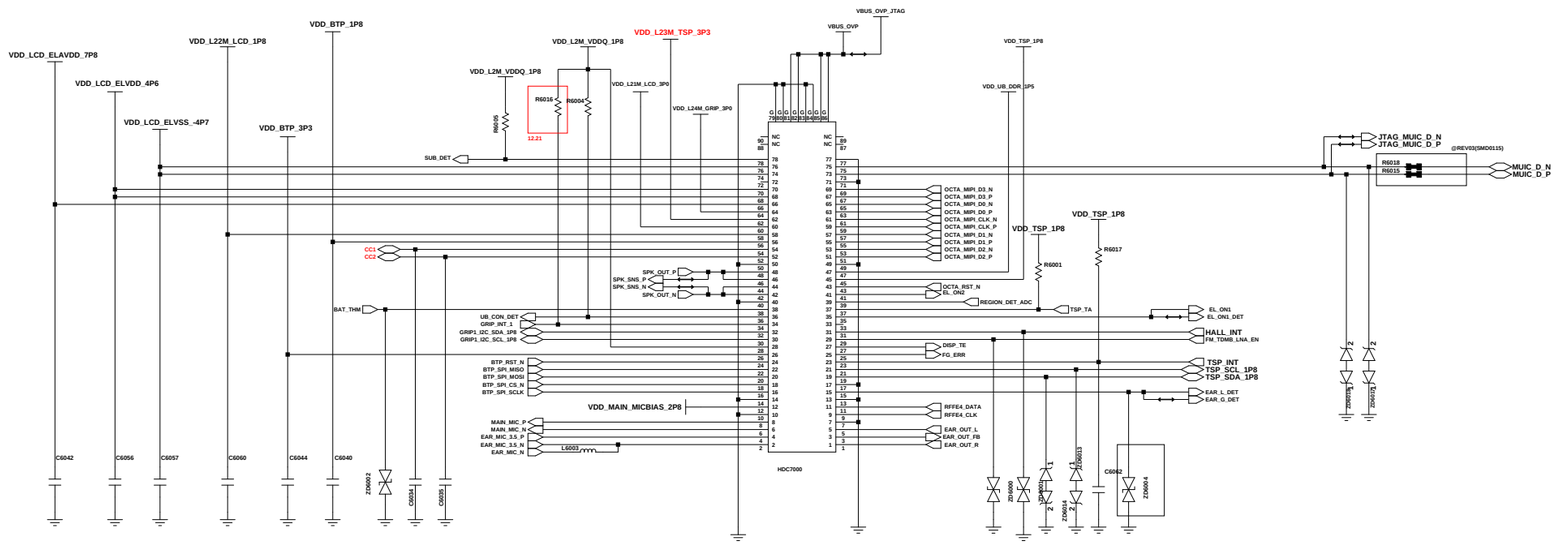

SHIELD CAN/BOTH HOLE

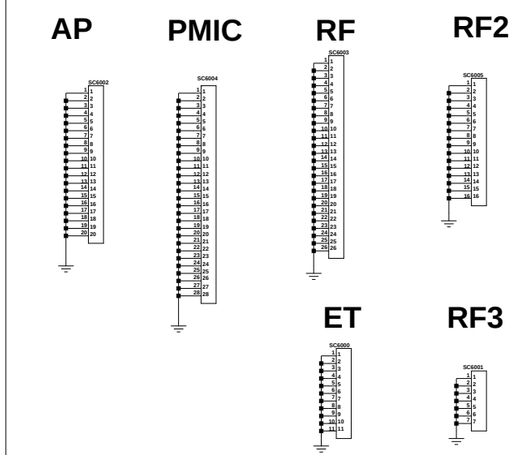

2D BAR CODE

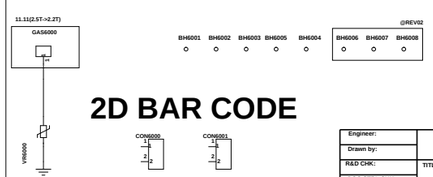

Engineer:		MEMORY, SUB PCB CON.	
Drawn by:		TITLE:	Size:
R&D CHK:		SM-A7160	
DOC CTRL CHK:			
MFG ENGR CHK:			
Changed by:	Date Changed:	Time Changed:	QA CHK:
REV	Drawing Number:	Page: 6/8	

SAMSUNG CONFIDENTIAL
THIS DOCUMENT CONTAINS CONFIDENTIAL
PROPRIETARY INFORMATION THAT IS
SAMSUNG ELECTRONICS CO'S PROPERTY.
DO NOT DISCLOSE TO OR DUPLICATE FOR OTHERS
EXCEPT AS AUTHORIZED BY SAMSUNG.

CAMERA

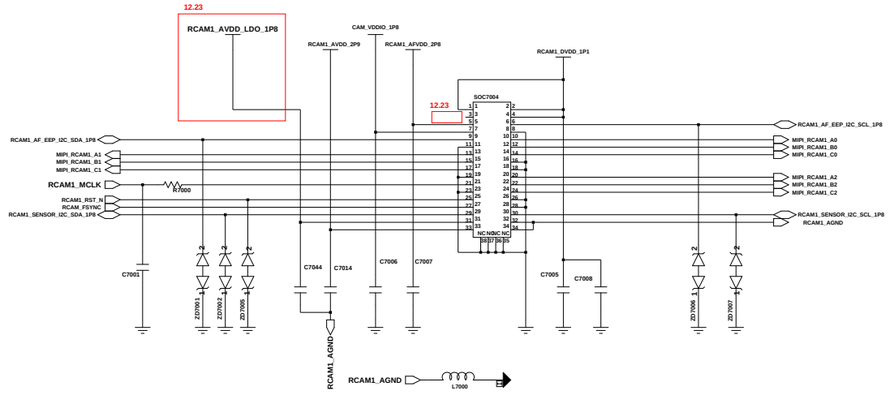

RCAM1_64M CAMERA(34PIN)

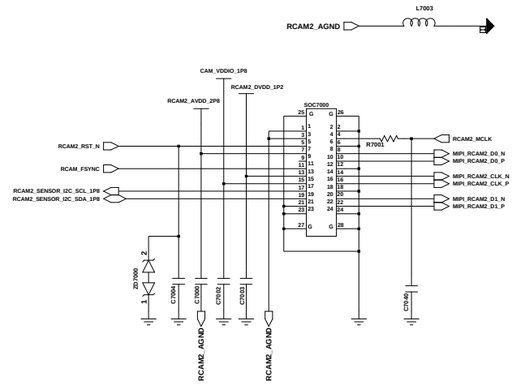

RCAM2_5M CAMERA(24PIN)

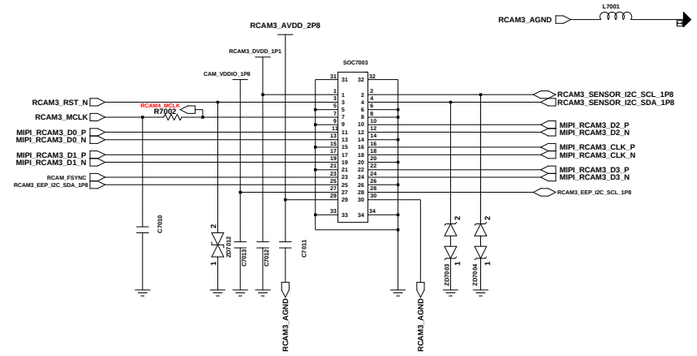

RCAM3_SUPER WIDE_12M CAMERA(30pin)_Hi1336

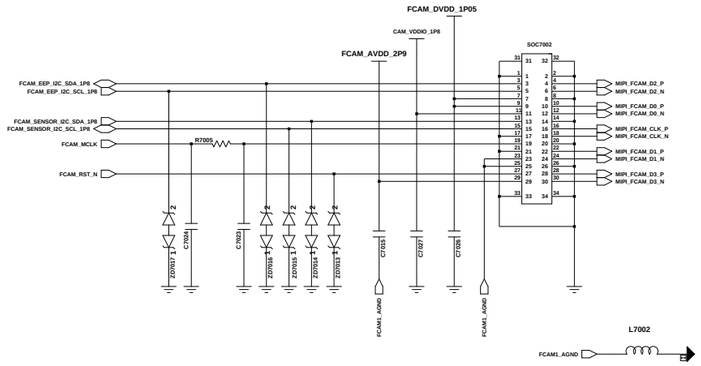

FRONT_32M CAMERA (30PIN)

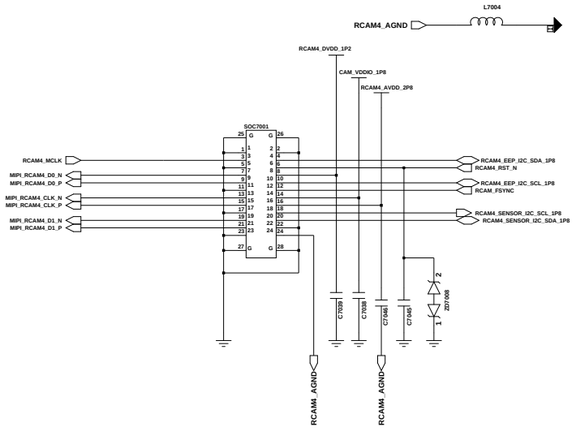

RCAM4_5M CAMERA(24PIN)

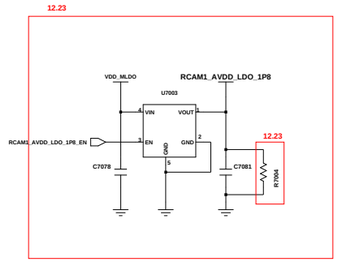

DISPLAY PMIC

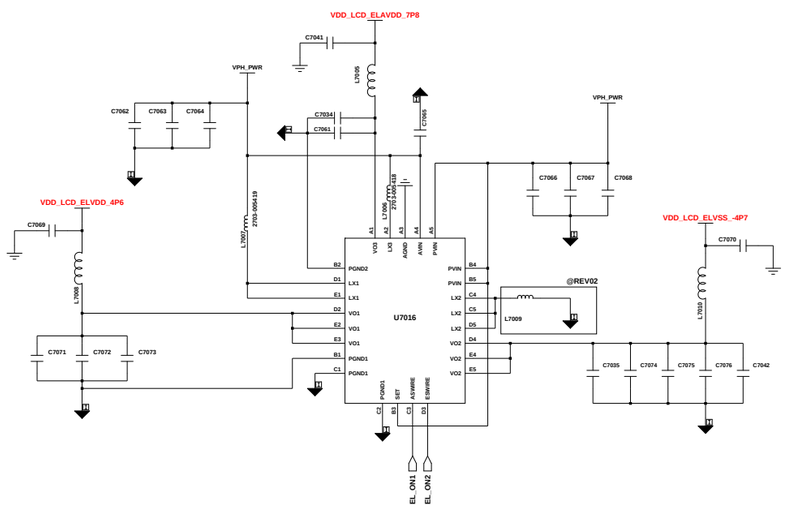

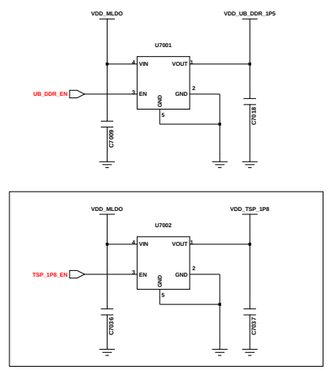

CAM PMIC

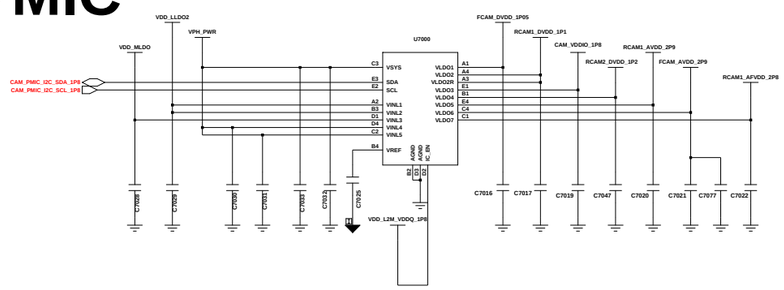

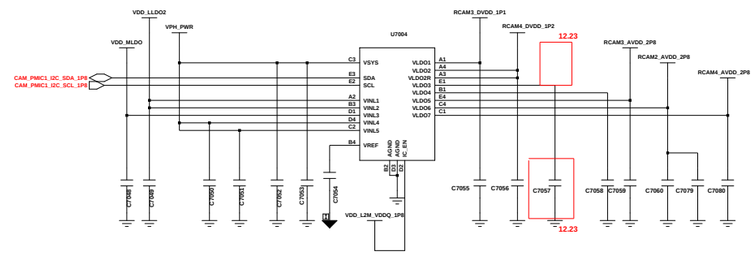

Engineer:	CAMERA, DISPLAY		
Drawn by:			
R&D CHK:	TITLE:	Size:	
DOC CTRL CHK:	SM-A7160		
MFG ENGR CHK:			
QA CHK:	REV	Drawing Number:	Page: 7/8

Changed by: | Date Changed: | Time Changed:

SAMSUNG CONFIDENTIAL
THIS DOCUMENT CONTAINS CONFIDENTIAL
PROPRIETARY INFORMATION THAT IS
SAMSUNG ELECTRONICS CO'S PROPERTY.
DO NOT DISCLOSE TO OR DUPLICATE FOR OTHERS
EXCEPT AS AUTHORIZED BY SAMSUNG.

AUDIO

SPK I/V SENSING BOOST AMP

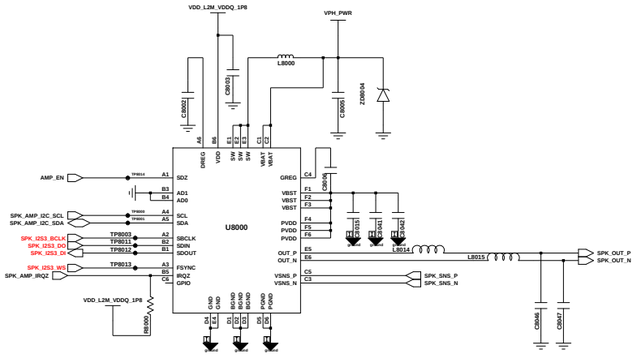

SUB MIC

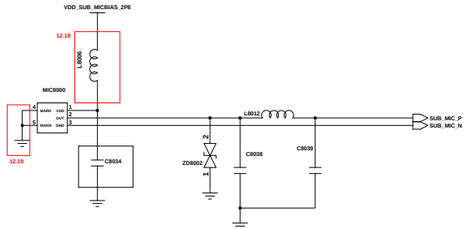

3.5pi ear

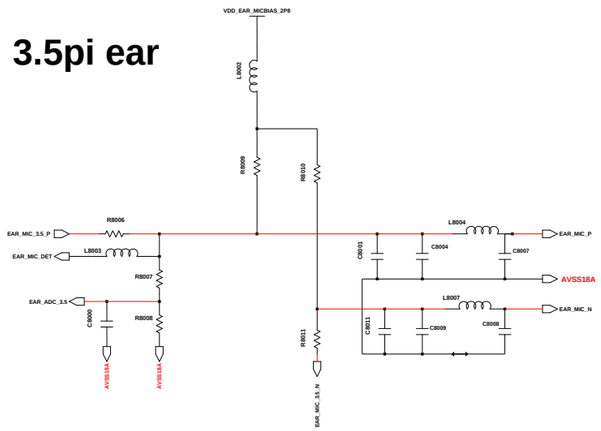

RCV

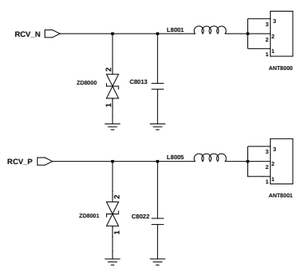

MOTOR

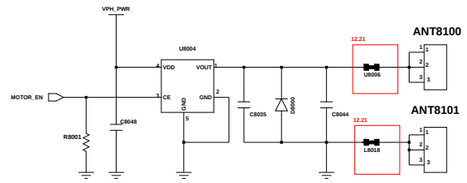

PWR/VOL KEY

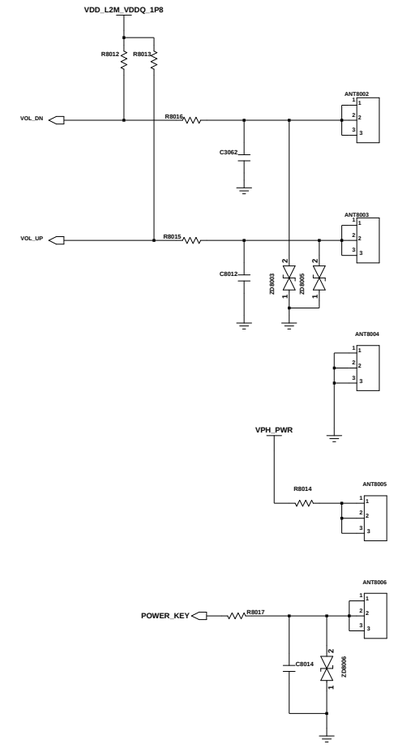

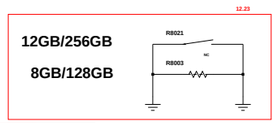

		0	S	B	eSE	
		R8004	R8005	R8018	R8002	
CHN	SM-A7160	Solder				
KOR	SM-A716S		Solder			
MEA	SM-A716B			Solder		
eSE					Solder	

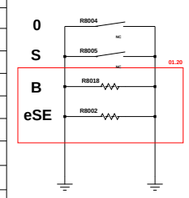

QRNG(KOR only)

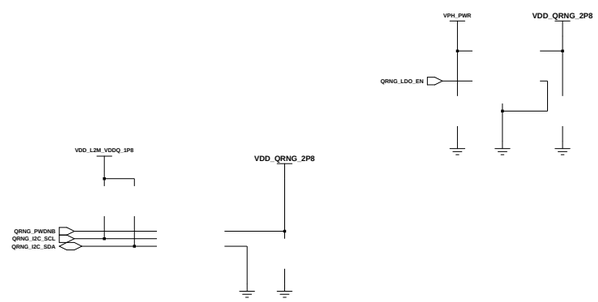

	AUDIO
DOC CTRL CHK:	SM-A7160
MFG ENGR CHK:	
QA CHK:	

Size: | REV | Drawing Number: | Page: 8/8

Changed by: | Date Changed: | Time Changed:

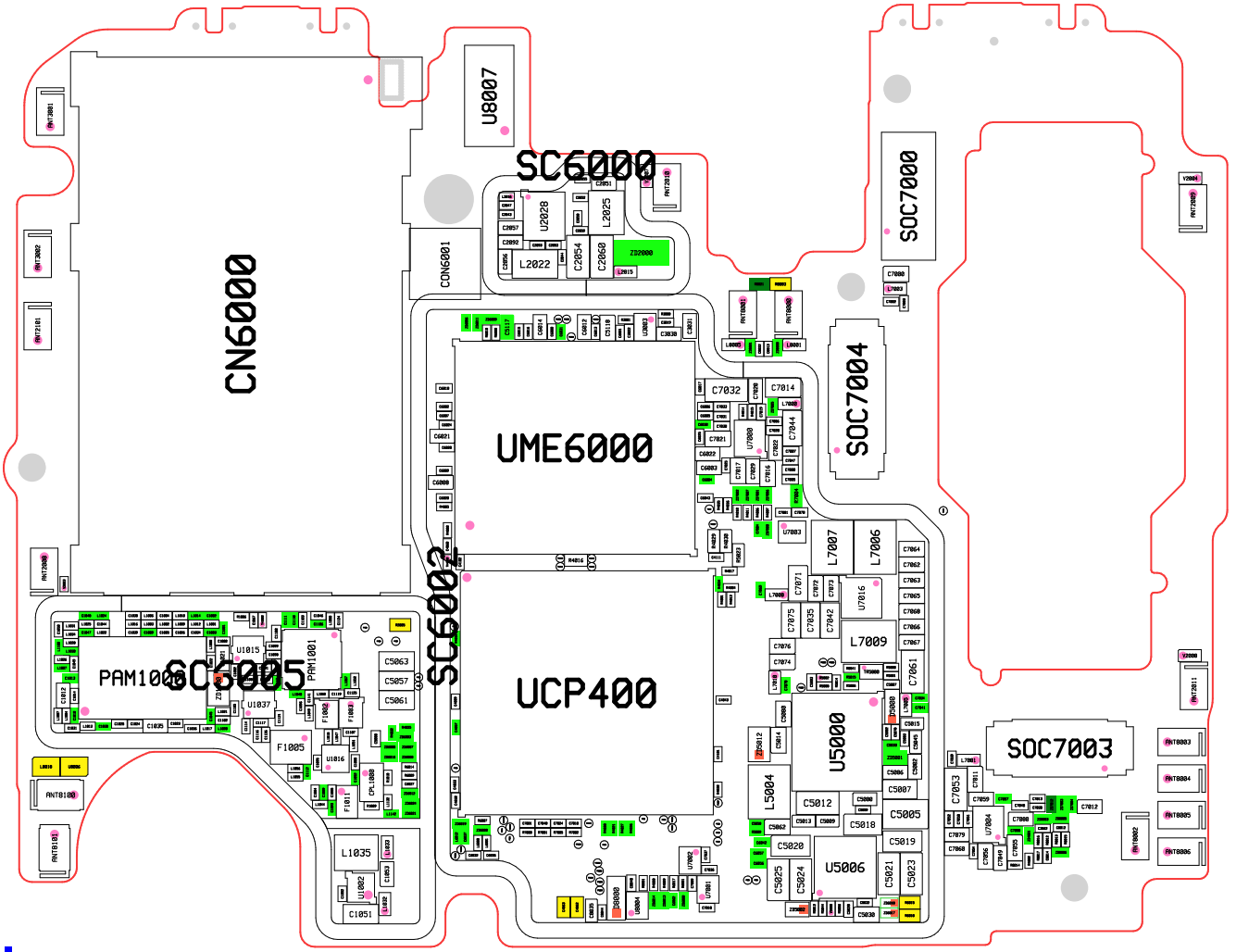

CN6000
SC6000
U8007
CON6001
SOC7000
SOC7004
UME6000
SC6002
UCP400
SC6005
PAM1000
PAM1001
U5000
SOC7003
U5006
L5004
L7007
L7006
L7009
L2022
L2025
U2028
C2054
C2060
ZD2000
C7032
C7014
C7044
C7061
C5012
C5005
C5018
C5019
C5020
C5021
C5023
C5024
C5025
C5063
C5057
C5061
F1005
L1035
C1051
U1015
U1037
U1016
U1002
U7016
U7004
C7053
C7012

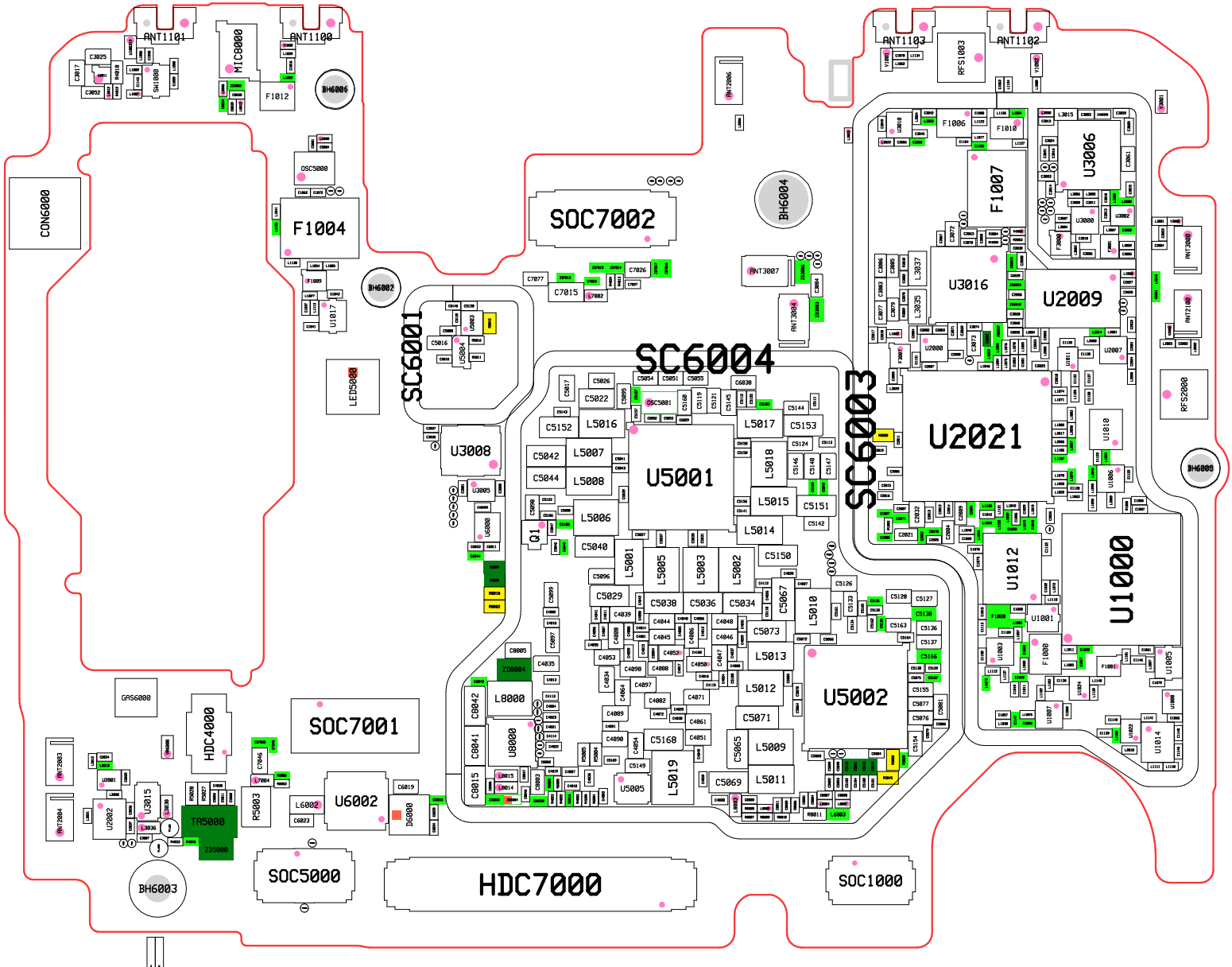

ANT1101
MIC8000
ANT1100
F1012
BH6006
OSC5000
F1004
CON6000
SOC7002
BH6004
ANT1103
RFS1003
ANT1102
F1006
F1010
U3006
F1007
U3016
U2009
ANT3007
ANT3004
BH6002
U1017
LED5000
SC6001
SC6004
SC6003
U2021
RFS2000
U3008
U5001
U1010
BH6005
U1012
U1000
U1001
U5002
GAS6000
HDC4000
SOC7001
L8000
U8000
U6002
D6000
TA5000
ZD5000
SOC5000
HDC7000
SOC1000
BH6003